RSLogix Micro Project Report

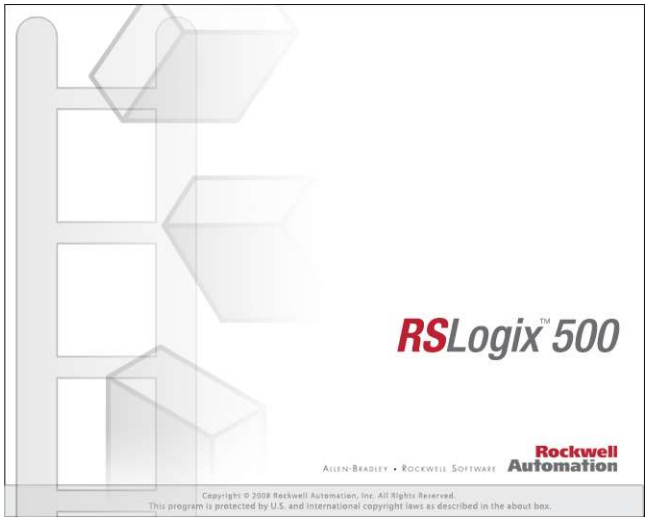

Processor Information

Processor Type: Bul.1763 MicroLogix 1100 Series B

Processor Name: UNTITLED

Total Memory Used: 132 Instruction Words Used - 58 Data Table Words Used

Total Memory Left: 6524 Instruction Words Left

Program Files: 5

Data Files: 9

Program ID: 1c48

I/O Configuration

0	Bul.1763	MicroLogix 1100 Series B
1		
2		
3		
4		

Channel Configuration

CHANNEL 0 (SYSTEM) - Driver: DF1 Full Duplex
CHANNEL 0 (SYSTEM) - Driver: DF1 Full Duplex Edit Resource/Owner Timeout: 60
CHANNEL 0 (SYSTEM) - Driver: DF1 Full Duplex Passthru Link ID: 1
CHANNEL 0 (SYSTEM) - Driver: DF1 Full Duplex Write Protected: No
CHANNEL 0 (SYSTEM) - Driver: DF1 Full Duplex Comms Servicing Selection: Yes
CHANNEL 0 (SYSTEM) - Driver: DF1 Full Duplex Message Servicing Selection: Yes
CHANNEL 0 (SYSTEM) - Driver: DF1 Full Duplex 1st AWA Append Character: \d
CHANNEL 0 (SYSTEM) - Driver: DF1 Full Duplex 2nd AWA Append Character: \a

Source ID: 1 (decimal)
Baud: 19200
Parity: NONE
Control Line : No Handshaking
Error Detection: CRC
Embedded Responses: Auto Detect
Duplicate Packet Detect: Yes
ACK Timeout(x20 ms): 50
NAK Retries: 3
ENQ Retries: 3

CHANNEL 1 (SYSTEM) - Driver: Ethernet
CHANNEL 1 (SYSTEM) - Driver: Ethernet Edit Resource/Owner Timeout: 60
CHANNEL 1 (SYSTEM) - Driver: Ethernet Passthru Link ID: 1
CHANNEL 1 (SYSTEM) - Driver: Ethernet Write Protected: No
CHANNEL 1 (SYSTEM) - Driver: Ethernet Comms Servicing Selection: Yes
CHANNEL 1 (SYSTEM) - Driver: Ethernet Message Servicing Selection: Yes

Hardware Address: 00:00:00:00:00:00
IP Address: 0.0.0.0
Subnet Mask: 0.0.0.0
Gateway Address: 0.0.0.0
Msg Connection Timeout (x 1mS): 15000
Msg Reply Timeout (x mS): 3000
Inactivity Timeout (x Min): 30
Bootp Enable: Yes
Dhcp Enable No
SNMP Enable: No
HTTP Enable: Yes
Auto Negotiate Enable: Yes
Port Speed Enable: 10/100 Mbps Full Duplex/Half Duplex
Contact:
Location:

Program File List

Name	Number	Type	Rungs	Debug	Bytes
[SYSTEM]	0	SYS	0	No	0
	1	SYS	0	No	0
MAIN	2	LADDER	3	No	21
SIMULATION	3	LADDER	2	No	45
LOGIC	4	LADDER	3	No	119

Data File List

Name	Number	Type	Scope	Debug	Words	Elements	Last
OUTPUT	0	O	Global	No	12	4	O:3
INPUT	1	I	Global	No	18	6	I:5
STATUS	2	S	Global	No	0	66	S:65
BINARY	3	B	Global	No	1	1	B3:0
TIMER	4	T	Global	No	12	4	T4:3
COUNTER	5	C	Global	No	3	1	C5:0
CONTROL	6	R	Global	No	3	1	R6:0
INTEGER	7	N	Global	No	1	1	N7:0
FLOAT	8	F	Global	No	8	4	F8:3

LAD 2 - MAIN --- Total Rungs in File = 3

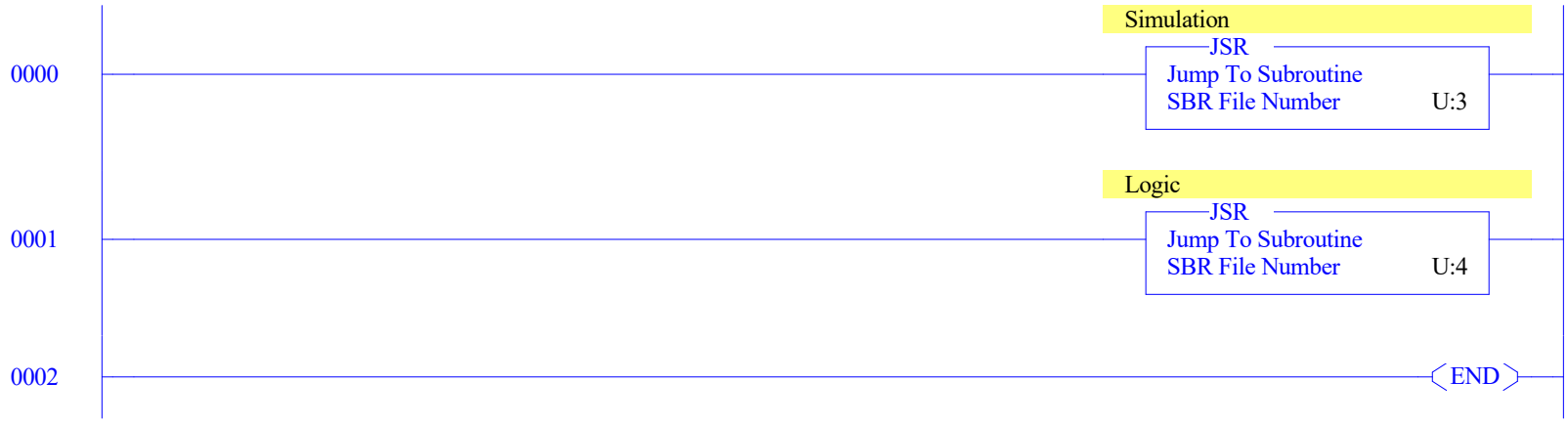

A timer pulses every 12 seconds to simulate an imaginary input from the rotameter for demonstration and testing purposes.

0000

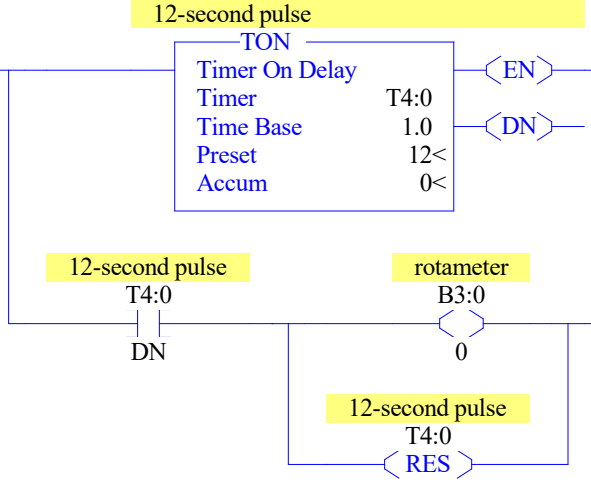

0001

END

This program measures the flow rate of fluid flowing past a digital rotameter.
The rotameter sends a pulse for every 6.3 gallons of fuid flowing past it (rotameter's k-factor).
On this rung, the time taken to recieve a pulse from the rotameter is recorded

0000

rotameter
B3:0
0

OSF
One Shot Falling
Storage Bit B3:0/1
Output Bit B3:0/2

pulse timer
B3:0
2

TON
Timer On Delay
Timer T4:3
Time Base 1.0
Preset 32767<
Accum 0<
EN
DN

time to pulse
MOV
Move
Source T4:3.ACC
0<
Dest F8:2
0.0<

6.3 gallons is divided by the time taken to recieve a pulse from the rotameter, which gives the flow rate of the fluid (F8:0).

0001

time to pulse
NEQ
Not Equal
Source A F8:2
0.0<
Source B 0.0
0.0<

DIV
Divide
Source A 6.3
6.3<
Source B F8:2
0.0<
Dest F8:1
0.0<

flow
MUL
Multiply
Source A F8:1
0.0<
Source B 60.0
60.0<
Dest F8:0
0.0<

0002

END

Data File O0 (bin) -- OUTPUT

Offset	15	14	13	12	11	10	9	8	7	6	5	4	3	2	1	0		
O:0.0	0	0	0	0	0	0	0	0	0	0	0	0	0	0	0	0	Bul.1763	MicroLogix 1100 Series B
O:0.1	0	0	0	0	0	0	0	0	0	0	0	0	0	0	0	0	Bul.1763	MicroLogix 1100 Series B
O:0.2	0	0	0	0	0	0	0	0	0	0	0	0	0	0	0	0	Bul.1763	MicroLogix 1100 Series B
O:0.3	0	0	0	0	0	0	0	0	0	0	0	0	0	0	0	0	Bul.1763	MicroLogix 1100 Series B

Data File I1 (bin) -- INPUT

Offset	15	14	13	12	11	10	9	8	7	6	5	4	3	2	1	0		
I:0.0	0	0	0	0	0	0	0	0	0	0	0	0	0	0	0	0	Bul.1763	MicroLogix 1100 Series B
I:0.1	0	0	0	0	0	0	0	0	0	0	0	0	0	0	0	0	Bul.1763	MicroLogix 1100 Series B
I:0.2	0	0	0	0	0	0	0	0	0	0	0	0	0	0	0	0	Bul.1763	MicroLogix 1100 Series B
I:0.3	0	0	0	0	0	0	0	0	0	0	0	0	0	0	0	0	Bul.1763	MicroLogix 1100 Series B
I:0.4	0	0	0	0	0	0	0	0	0	0	0	0	0	0	0	0	Bul.1763	MicroLogix 1100 Series B-Analog
I:0.5	0	0	0	0	0	0	0	0	0	0	0	0	0	0	0	0	Bul.1763	MicroLogix 1100 Series B-Analog

Main

Processor Mode S:1/0 - S:1/4 = Remote Program Mode
On Power up Go To Run (Mode Behavior) S:1/12 = 0
First Pass S:1/15 = No
Free Running Clock S:4 = 0000-0000-0000-0000

Proc

OS Catalog Number S:57 = 1100
OS Series S:58 = A
OS FRS S:59 =
Processor Catalog Number S:60 =
Processor Series S:61 = A
Processor FRN S:62 =
User Program Type S:63 = 8001h
Compiler Revision Number S:64 =

Scan Times

Maximum (x10 ms) S:22 = 0
Watchdog (x10 ms) S:3 (high byte) = 10
Last 100 uSec Scan Time S:35 = 0
Scan Toggle Bit S:33/9 = 0

Math

Math Overflow Selected S:2/14 = 0
Overflow Trap S:5/0 = 0
Carry S:0/0 = 0
Overflow S:0/1 = 0
Zero Bit S:0/2 = 0
Sign Bit S:0/3 = 0
Math Register (lo word) S:13 = 0
Math Register (high word) S:14-S:13 = 0
Math Register (32 Bit) S:14-S:13 = 0

Chan 0

Processor Mode S:1/0- S:1/4 = Remote Program Mode
Node Address S:15 (low byte) = 0
Baud Rate S:15 (high byte) = ?
Channel Mode S:33/3 = 0
Comms Active S:33/4 = 0
Incoming Cmd Pending S:33/0 = 0
Msg Reply Pending S:33/1 = 0
Outgoing Msg Cmd Pending S:33/2 = 0

Debug

Suspend Code S:7 = 0
Suspend File S:8 = 0

Errors

Fault Override At Power Up S:1/8 = 0
Startup Protection Fault S:1/9 = 0
Major Error Halt S:1/13 = 0
Overflow Trap S:5/0 = 0
Control Register Error S:5/2 = 0
Major Error Executing User Fault Rtn. S:5/3 = 0
Battery Low S:5/11 = 0
Input Filter Selection Modified S:5/13 = 0
ASCII String Manipulation error S:5/15 = 0
Fault Routine S:29 = 0
Major Error S:6 = 0h
Error Description:

Protection

Deny Future Access S:1/14 = No
Data File Overwrite Protection Lost S:36/10 = False

Mem Module

Memory Module Loaded On Boot S:5/8 = 0
Password Mismatch S:5/9 = 0
Load Memory Module On Memory Error S:1/10 = 0
Load Memory Module Always S:1/11 = 0
On Power up Go To Run (Mode Behavior) S:1/12 = 0
Program Compare S:2/9 = 0
Data File Overwrite Protection Lost S:36/10 = 0

Forces

Forces Enabled S:1/5 = Yes
Forces Installed S:1/6 = No

Data File B3 (bin) -- BINARY

Offset	15	14	13	12	11	10	9	8	7	6	5	4	3	2	1	0	(Symbol) Description
B3:0	0	0	0	0	0	0	0	0	0	0	0	0	0	0	0	0	

Data File T4 -- TIMER

Offset	EN	TT	DN	BASE	PRE	ACC	(Symbol) Description
T4:0	0	0	0	1.0 sec	12	0	12-second pulse
T4:1	0	0	0	1.0 sec	60	0	1-minute timer
T4:2	0	0	0	.01 sec	0	0	
T4:3	0	0	0	1.0 sec	32767	0	pulse timer

Data File C5 -- COUNTER

Offset	CU	CD	DN	OV	UN	UA	PRE	ACC	(Symbol)	Description
C5:0	0	0	0	0	0	0	0	0		

Data File R6 -- CONTROL

Offset	EN	EU	DN	EM	ER	UL	IN	FD	LEN	POS	(Symbol)	Description
R6:0	0	0	0	0	0	0	0	0	0	0		

Data File N7 (dec) -- INTEGER

Offset	0	1	2	3	4	5	6	7	8	9
N7:0	0									

Data File F8 -- FLOAT

Offset	0	1	2	3	4
F8:0	0	0	0	0	

Address/Symbol Database

Address	Symbol	Scope	Description	Sym Group	Dev. Code	ABV	BLW
B3:0/0			rotameter				
B3:0/1							
B3:0/2							
B3:0/3							
B3:0/4			ON				
B3:0/5							
B3:0/6							
B3:0/7							
B3:0/8							
B3:0/9							
B3:0/10							
F8:0			flow				
F8:1							
F8:2			time to pulse				
F8:3							
N7:0							
S:0			Arithmetic Flags				
S:0/0			Processor Arithmetic Carry Flag				
S:0/1			Processor Arithmetic Underflow/ Overflow Flag				
S:0/2			Processor Arithmetic Zero Flag				
S:0/3			Processor Arithmetic Sign Flag				
S:1			Processor Mode Status/ Control				
S:1/0			Processor Mode Bit 0				
S:1/1			Processor Mode Bit 1				
S:1/2			Processor Mode Bit 2				
S:1/3			Processor Mode Bit 3				
S:1/4			Processor Mode Bit 4				
S:1/5			Forces Enabled				
S:1/6			Forces Present				
S:1/7			Comms Active				
S:1/8			Fault Override at Powerup				
S:1/9			Startup Protection Fault				
S:1/10			Load Memory Module on Memory Error				
S:1/11			Load Memory Module Always				
S:1/12			Load Memory Module and RUN				
S:1/13			Major Error Halted				
S:1/14			Access Denied				
S:1/15			First Pass				
S:2/0			STI Pending				
S:2/1			STI Enabled				
S:2/2			STI Executing				
S:2/3			Index Addressing File Range				
S:2/4			Saved with Debug Single Step				
S:2/5			DH-485 Incoming Command Pending				
S:2/6			DH-485 Message Reply Pending				
S:2/7			DH-485 Outgoing Message Command Pending				
S:2/15			Comms Servicing Selection				
S:3			Current Scan Time/ Watchdog Scan Time				
S:4			Time Base				
S:5/0			Overflow Trap				
S:5/2			Control Register Error				
S:5/3			Major Err Detected Executing UserFault Routine				
S:5/4			M0-M1 Referenced on Disabled Slot				
S:5/8			Memory Module Boot				
S:5/9			Memory Module Password Mismatch				
S:5/10			STI Overflow				
S:5/11			Battery Low				
S:6			Major Error Fault Code				
S:7			Suspend Code				
S:8			Suspend File				
S:9			Active Nodes				
S:10			Active Nodes				
S:11			I/O Slot Enables				
S:12			I/O Slot Enables				
S:13			Math Register				
S:14			Math Register				
S:15			Node Address/ Baud Rate				
S:16			Debug Single Step Rung				
S:17			Debug Single Step File				
S:18			Debug Single Step Breakpoint Rung				
S:19			Debug Single Step Breakpoint File				
S:20			Debug Fault/ Powerdown Rung				
S:21			Debug Fault/ Powerdown File				
S:22			Maximum Observed Scan Time				
S:23			Average Scan Time				
S:24			Index Register				
S:25			I/O Interrupt Pending				
S:26			I/O Interrupt Pending				
S:27			I/O Interrupt Enabled				
S:28			I/O Interrupt Enabled				
S:29			User Fault Routine File Number				
S:30			STI Setpoint				
S:31			STI File Number				
S:32			I/O Interrupt Executing				

Address/Symbol Database

Address	Symbol	Scope	Description	Sym Group	Dev. Code	ABV	BLW
S:33			Extended Proc Status Control Word				
S:33/0			Incoming Command Pending				
S:33/1			Message Reply Pending				
S:33/2			Outgoing Message Command Pending				
S:33/3			Selection Status User/DF1				
S:33/4			Communicat Active				
S:33/5			Communicat Servicing Selection				
S:33/6			Message Servicing Selection Channel 0				
S:33/7			Message Servicing Selection Channel 1				
S:33/8			Interrupt Latency Control Flag				
S:33/9			Scan Toggle Flag				
S:33/10			Discrete Input Interrupt Reconfigur Flag				
S:33/11			Online Edit Status				
S:33/12			Online Edit Status				
S:33/13			Scan Time Timebase Selection				
S:33/14			DTR Control Bit				
S:33/15			DTR Force Bit				
S:34			Pass-thru Disabled				
S:34/0			Pass-Thru Disabled Flag				
S:34/1			DH+ Active Node Table Enable Flag				
S:34/2			Floating Point Math Flag Disable,Fl				
S:35			Last 1 ms Scan Time				
S:36			Extended Minor Error Bits				
S:36/8			DII Lost				
S:36/9			STI Lost				
S:36/10			Memory Module Data File Overwrite Protection				
S:37			Clock Calendar Year				
S:38			Clock Calendar Month				
S:39			Clock Calendar Day				
S:40			Clock Calendar Hours				
S:41			Clock Calendar Minutes				
S:42			Clock Calendar Seconds				
S:43			STI Interrupt Time				
S:44			I/O Event Interrupt Time				
S:45			DII Interrupt Time				
S:46			Discrete Input Interrupt- File Number				
S:47			Discrete Input Interrupt- Slot Number				
S:48			Discrete Input Interrupt- Bit Mask				
S:49			Discrete Input Interrupt- Compare Value				
S:50			Processor Catalog Number				
S:51			Discrete Input Interrupt- Return Number				
S:52			Discrete Input Interrupt- Accumulat				
S:53			Reserved/ Clock Calendar Day of the Week				
S:55			Last DII Scan Time				
S:56			Maximum Observed DII Scan Time				
S:57			Operating System Catalog Number				
S:58			Operating System Series				
S:59			Operating System FRN				
S:61			Processor Series				
S:62			Processor Revision				
S:63			User Program Type				
S:64			User Program Functional Index				
S:65			User RAM Size				
S:66			Flash EEPROM Size				
S:67			Channel 0 Active Nodes				
S:68			Channel 0 Active Nodes				
S:69			Channel 0 Active Nodes				
S:70			Channel 0 Active Nodes				
S:71			Channel 0 Active Nodes				
S:72			Channel 0 Active Nodes				
S:73			Channel 0 Active Nodes				
S:74			Channel 0 Active Nodes				
S:75			Channel 0 Active Nodes				
S:76			Channel 0 Active Nodes				
S:77			Channel 0 Active Nodes				
S:78			Channel 0 Active Nodes				
S:79			Channel 0 Active Nodes				
S:80			Channel 0 Active Nodes				
S:81			Channel 0 Active Nodes				
S:82			Channel 0 Active Nodes				
S:83			DH+ Active Nodes				
S:84			DH+ Active Nodes				
S:85			DH+ Active Nodes				
S:86			DH+ Active Nodes				
T4:0			12-second pulse				
T4:0/DN							
T4:1			1-minute timer				
T4:1/DN							
T4:3			pulse timer				
T4:3.ACC							
T4:3/EN							
U:3			Simulation				
U:4			Logic				

Instruction Comment Database

Address	Instruction	Description

Symbol Group Database

Group_Name	Description